LAREDO 03 A

PLECH
STAHL KOMPLETT
FULL STEEL
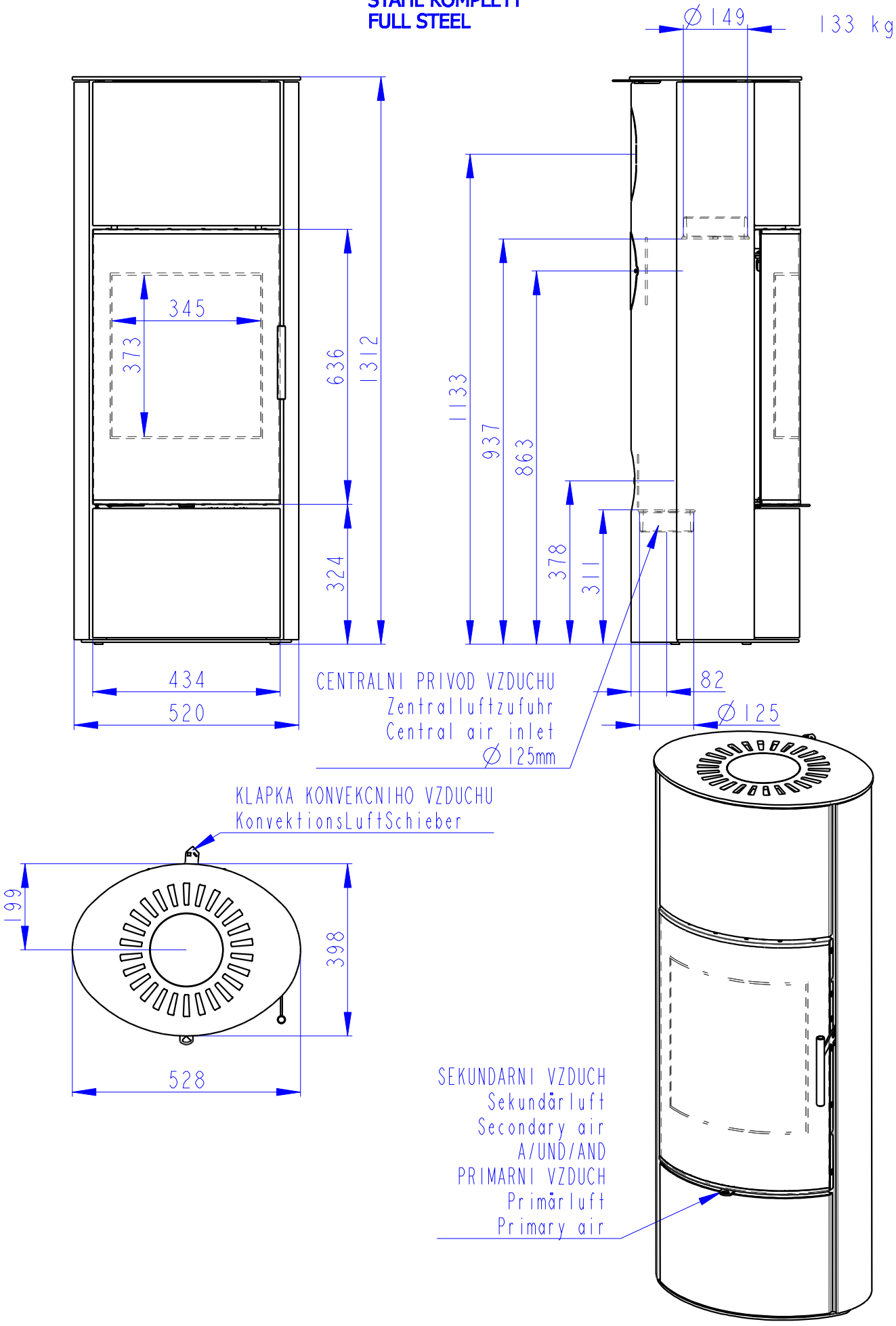
133 kg