Rozmery v mm
Maße in mm
Dimensions in mm

Heat T 2g 70.50.01
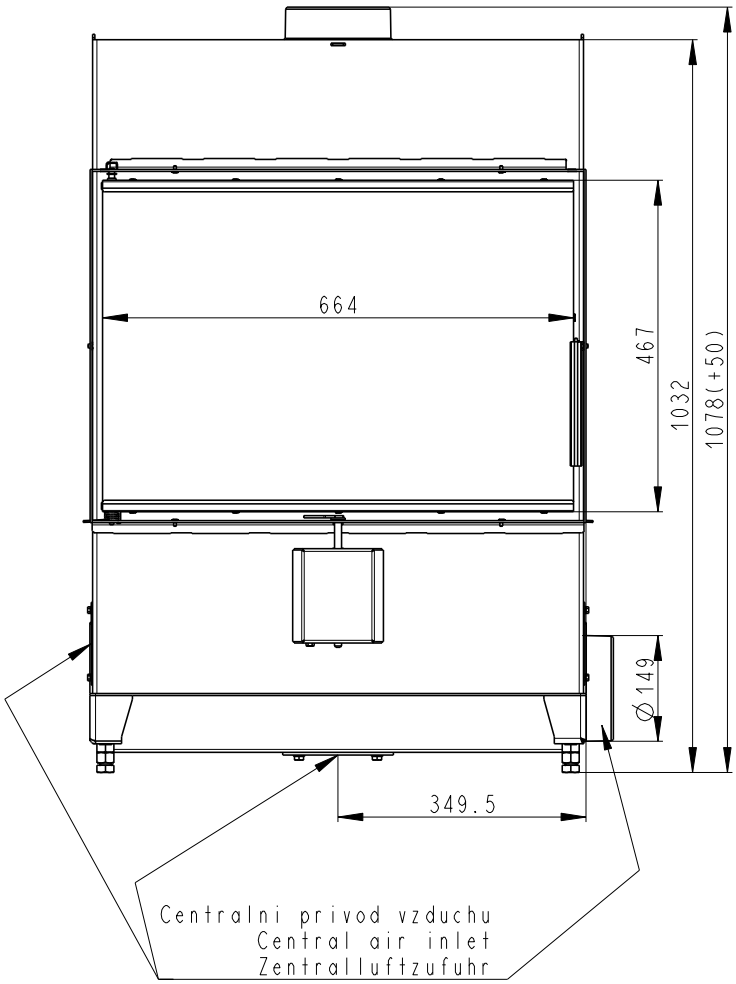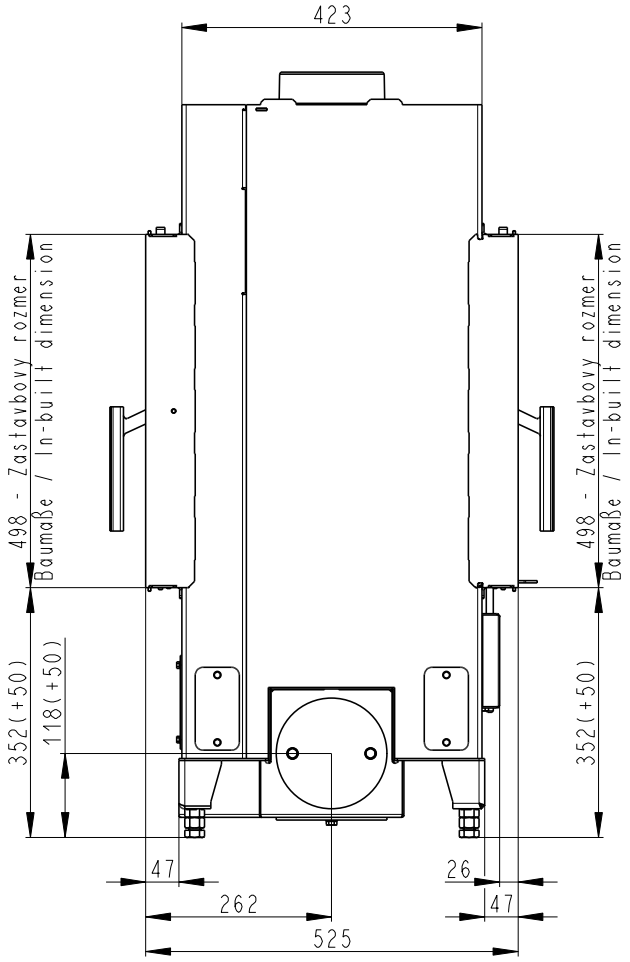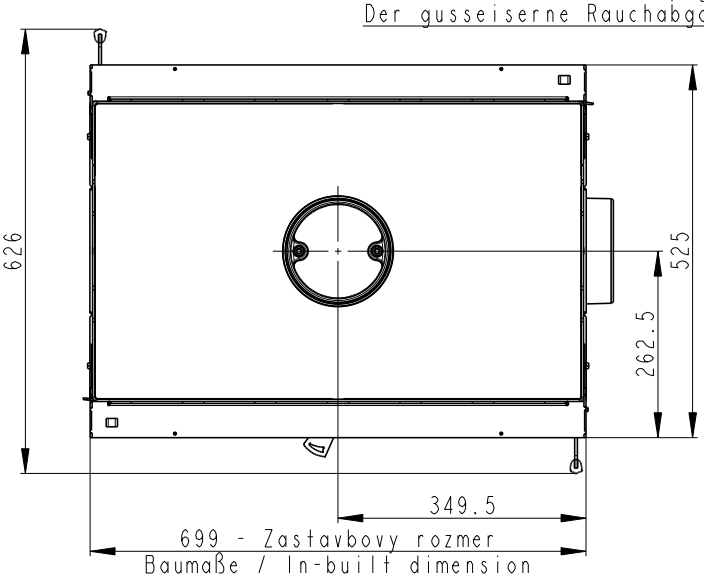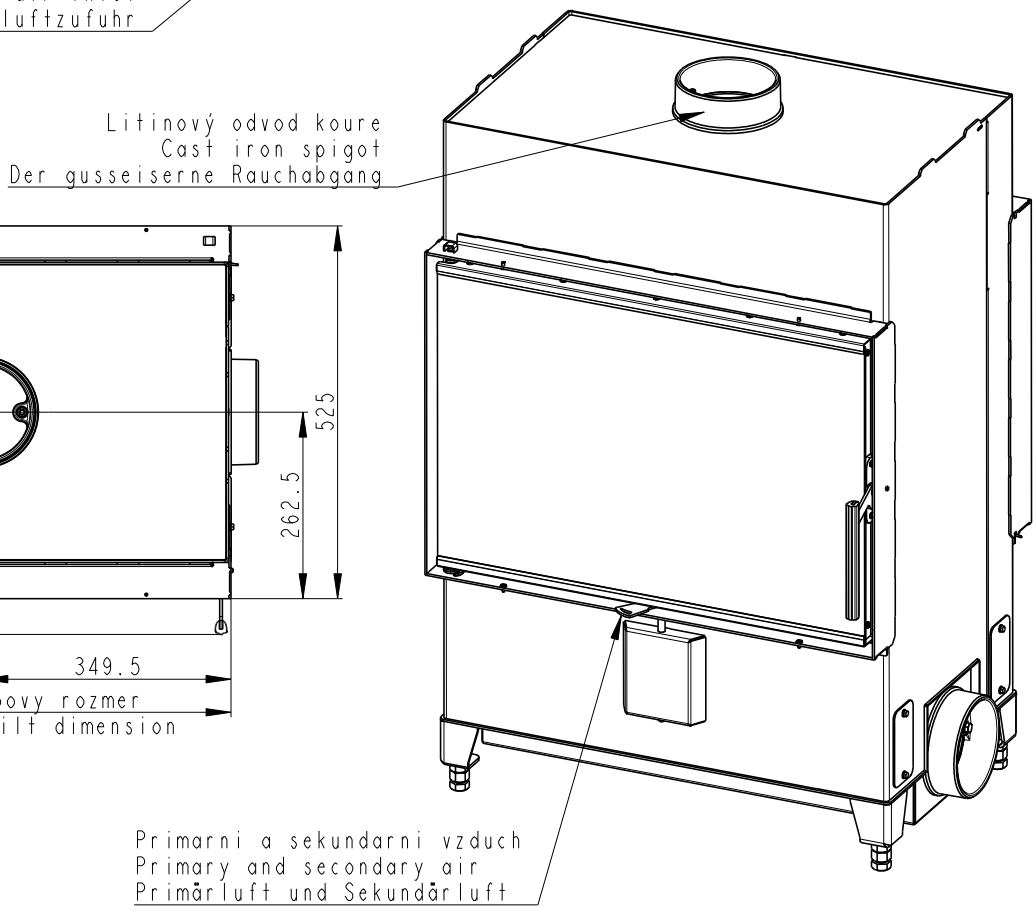
175kg