EVORA 02 AKUM
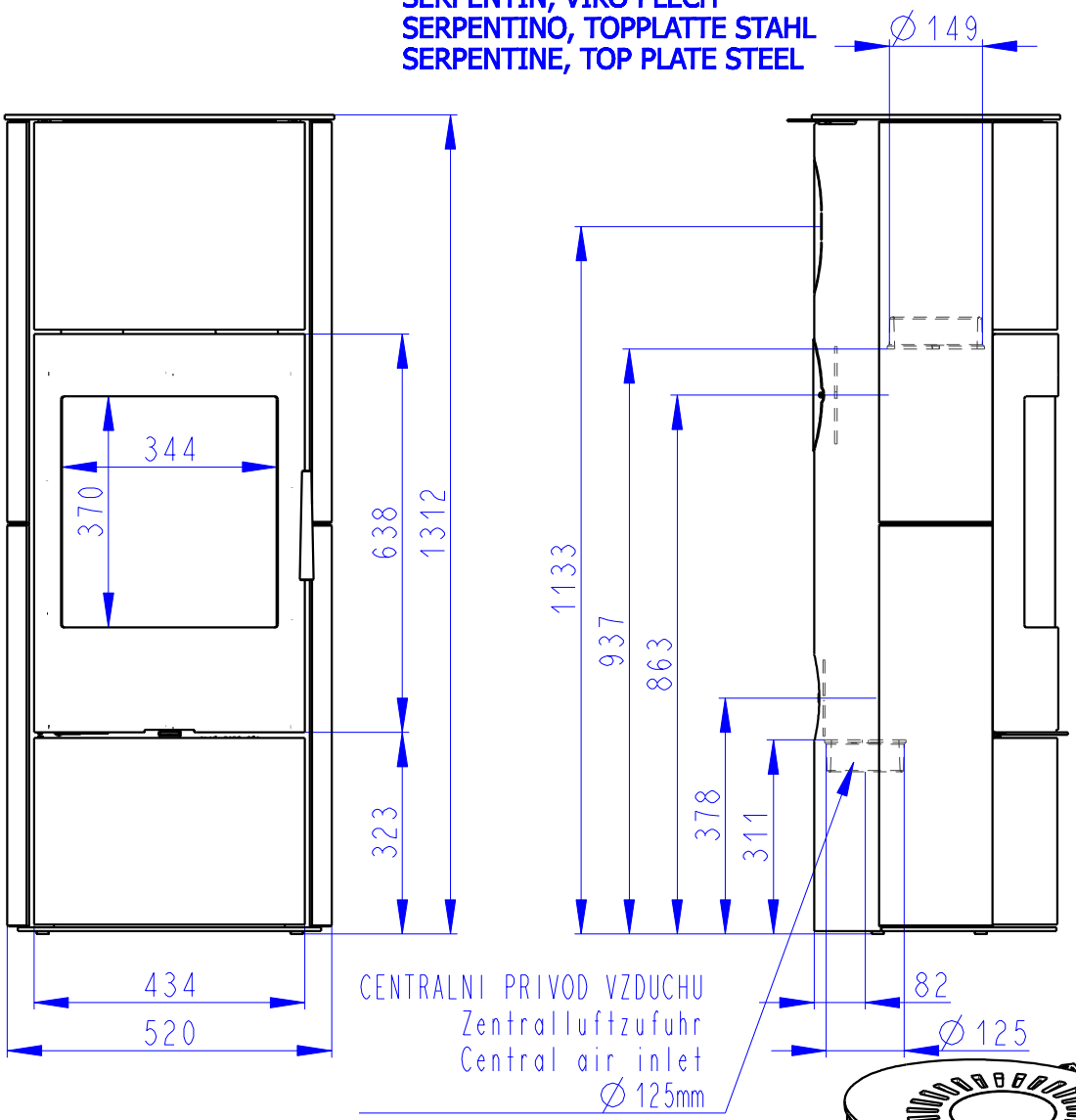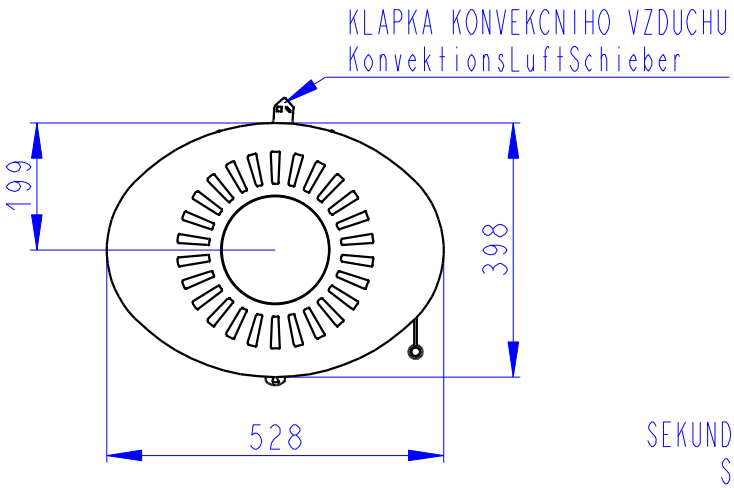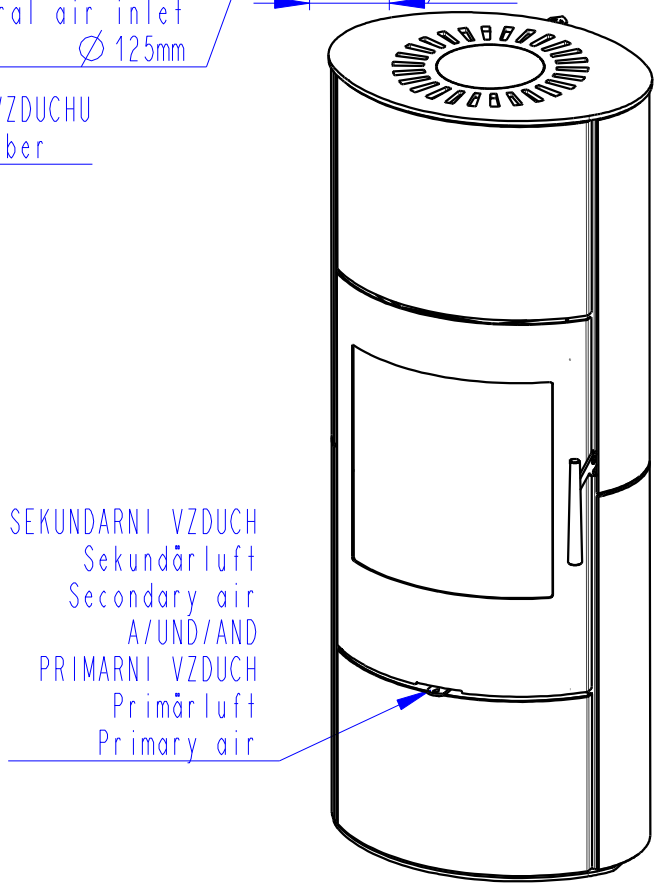
SERPENTIN, VIKO PLECH
SERPENTINO, TOPPLATTE STAHL
SERPENTINE, TOP PLATE STEEL