Romotop®

Heat C 3g L 65.52.31.01 (21, 24)

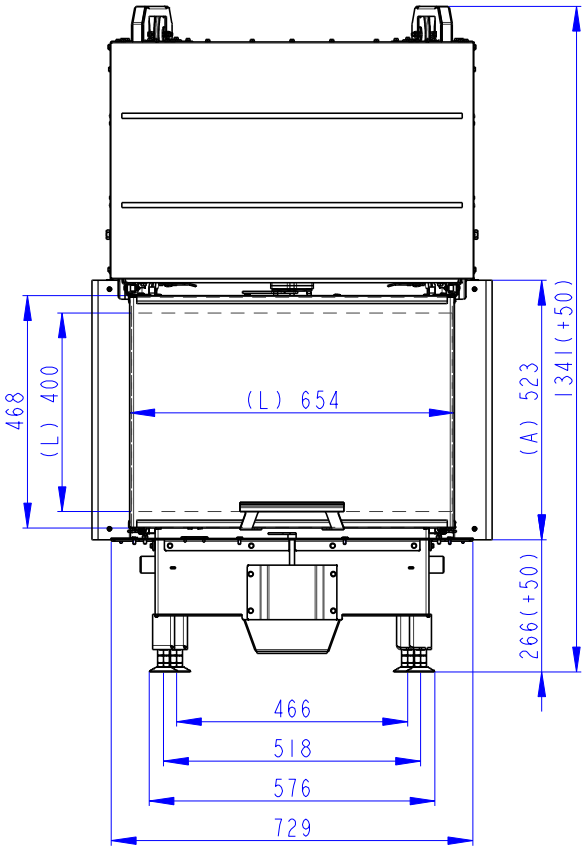

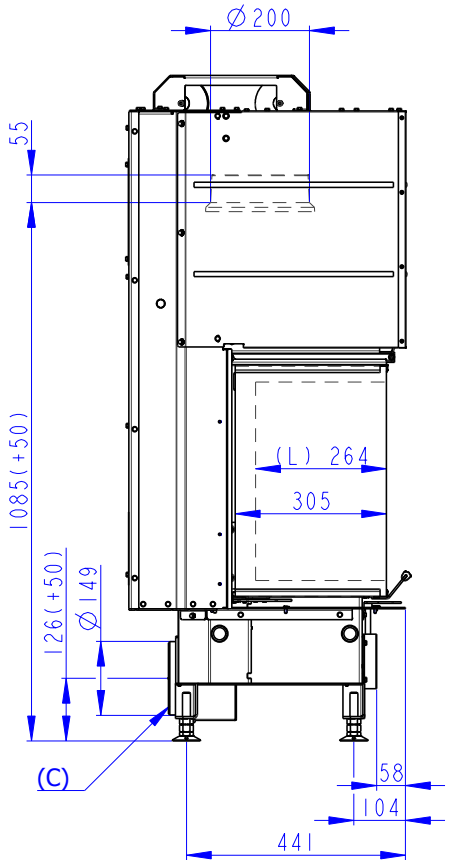

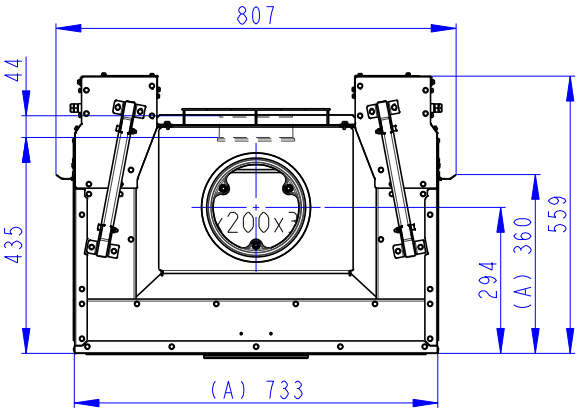

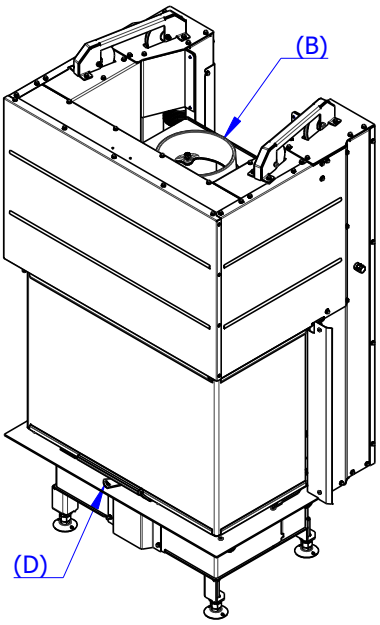

(A) Zastavbovy rozmer / In-built dimension / Baumaße
(B) Litinový odvod koure / Cast iron spigot / Der gusseiserne Rauchabgang
(C) Centralni privod vzduchu / Central air inlet / Zentralluftzufuhr
(D) Primarni a sekundarni vzduch / Primary and secondary air / Primärluft und Sekundärluft
(L) Volna plocha proskleni / Free glass area / Freie Glassichtfläche

Romotop®

Heat C 3g L 65.52.31.01 (21, 24) + H2 AIRBOX 02

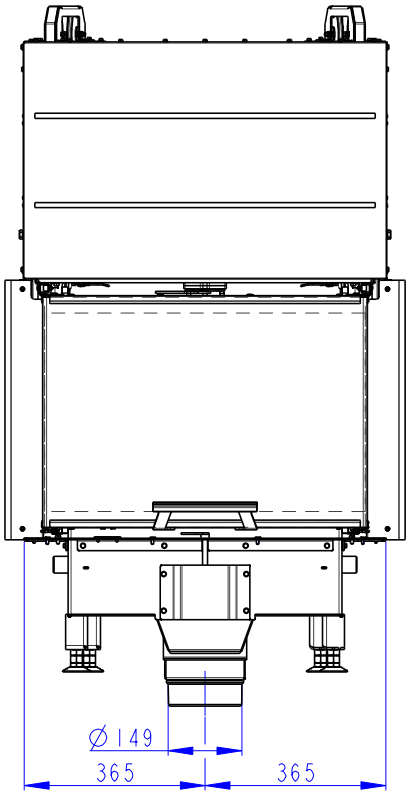

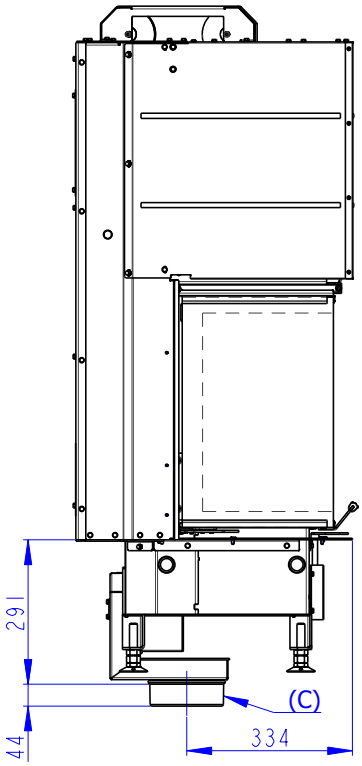

Romotop®

Heat C 3g L 65.52.31.01 (21, 24) + HC2LH KON01

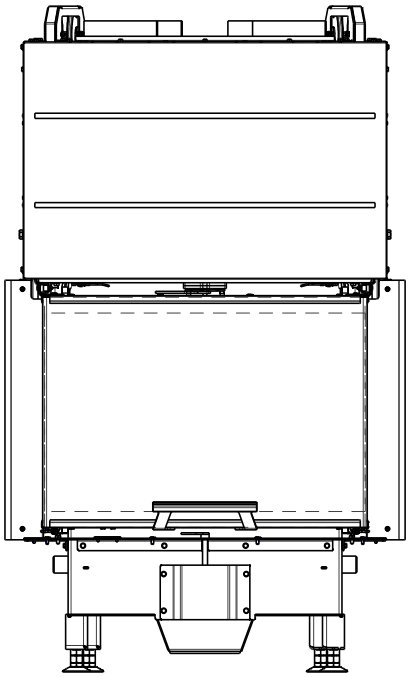

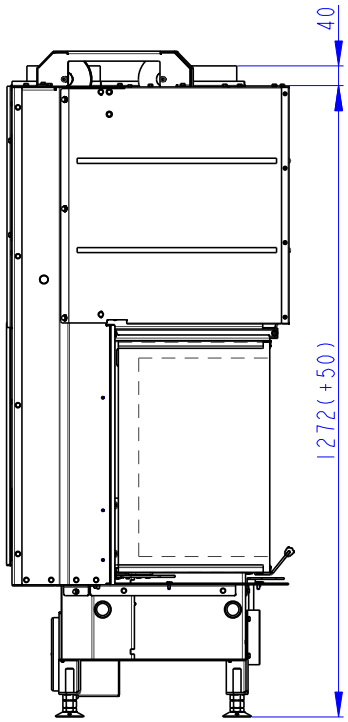

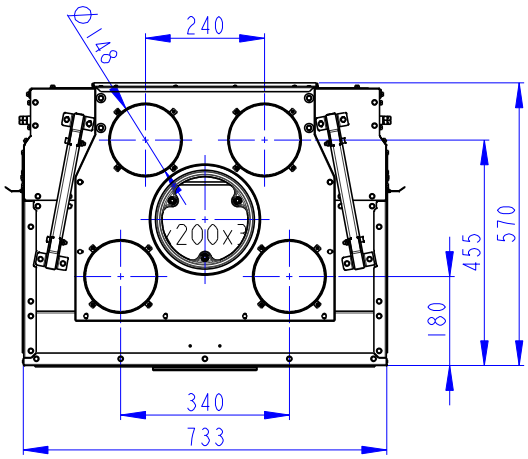

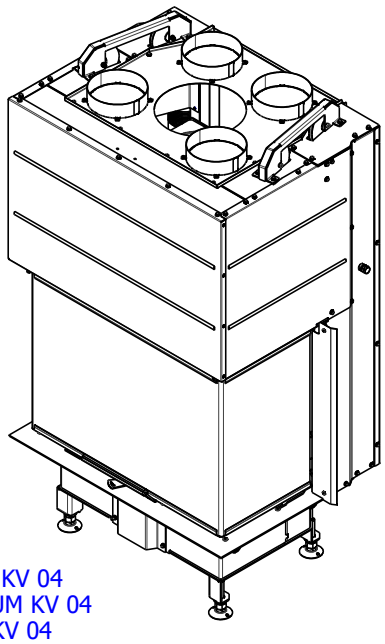

NELZE KOMBINOVAT SE SADAMI AKUMULACI AKKUM KV 02, AKKUM KV 04
UNABLE TO COMBINE WITH ACCUMULATION SETS AKKUM KV 02, AKKUM KV 04
NICHT KOMBINIERBAR MIT SPEICHERSATZ AKKUM KV 02, AKKUM KV 04

Romotop®

Heat C 3g L 65.52.31.01 (21, 24) + AKKUM KV 02

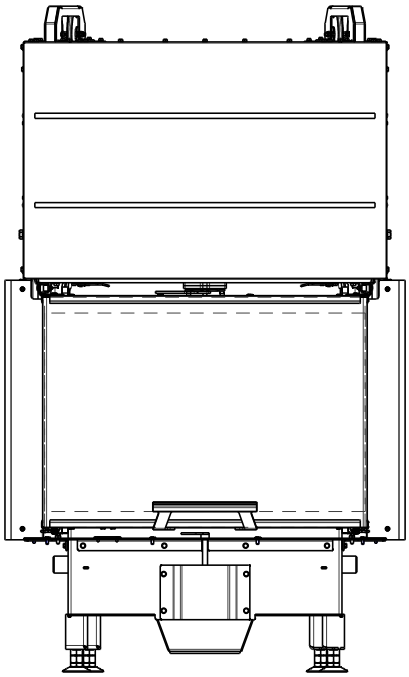

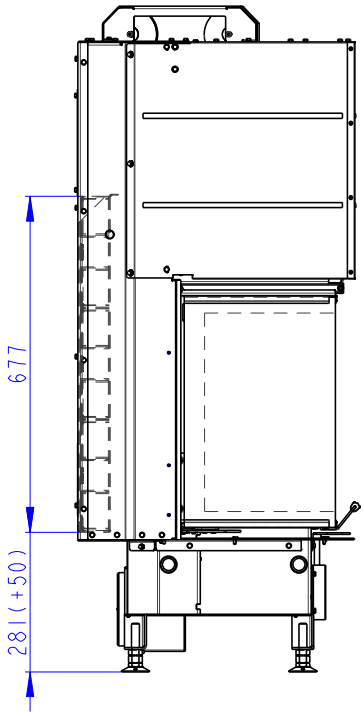

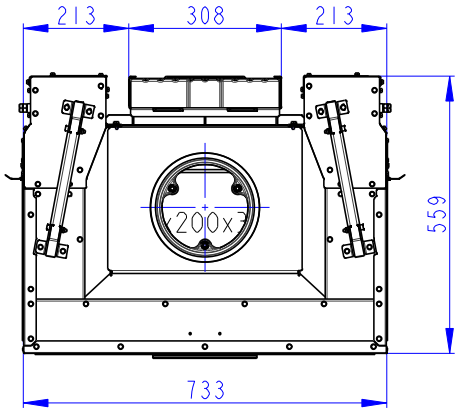

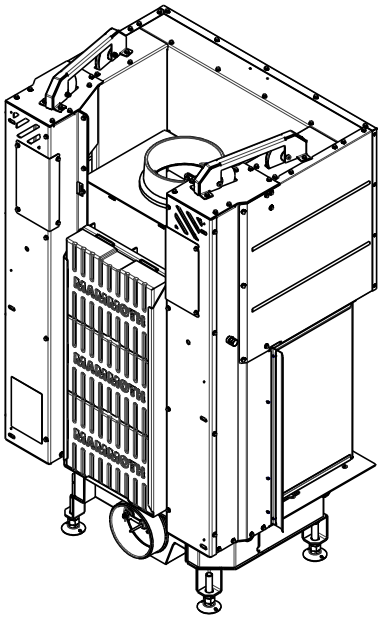

Romotop®

Heat C 3g L 65.52.31.01 (21, 24) + AKKUM KV 04

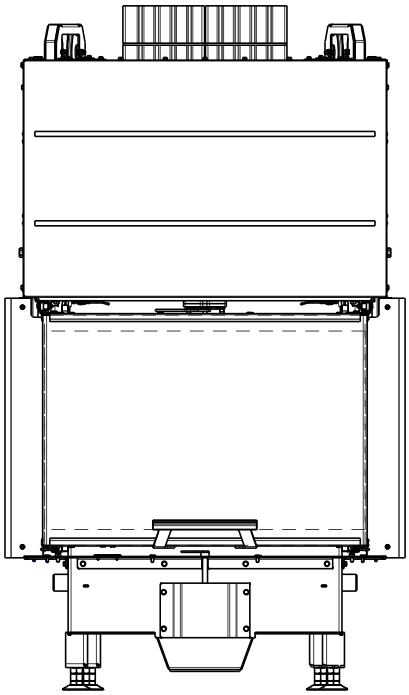

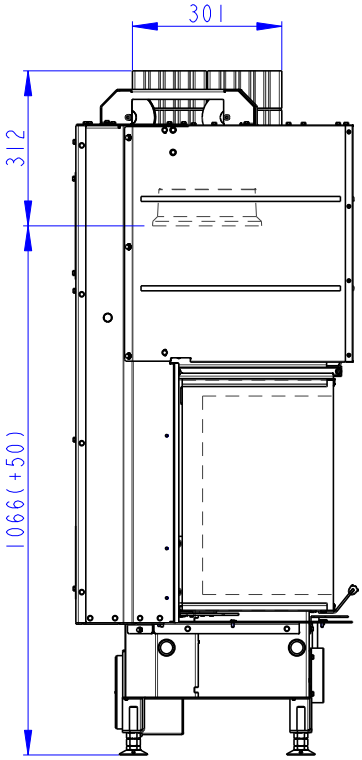

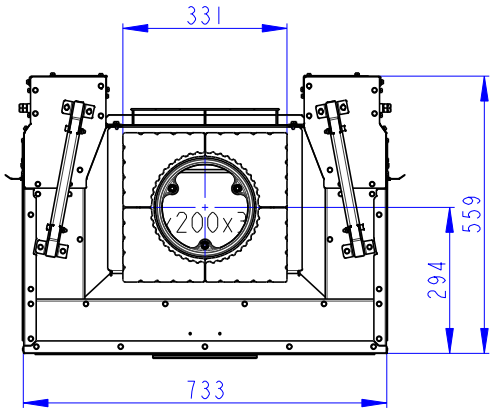

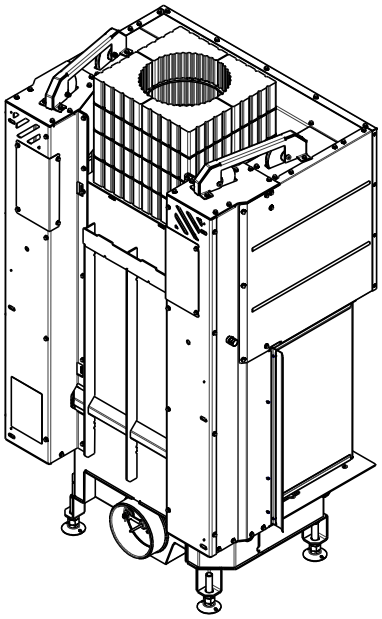

Romotop®

Heat C 3g L 65.52.31.01 (21, 24) + HC3LH RAM11

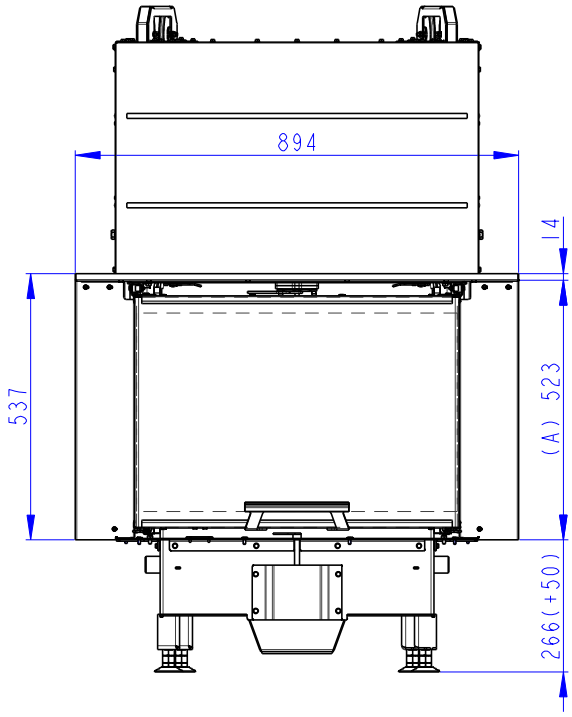

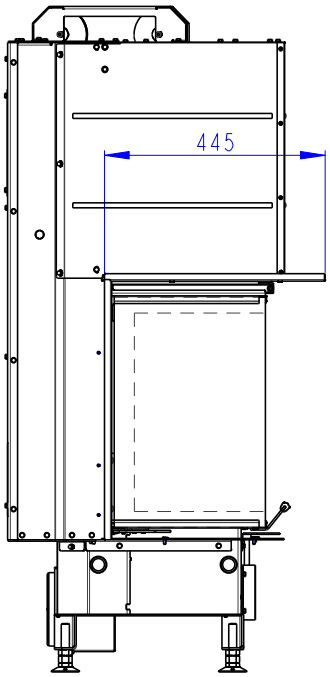

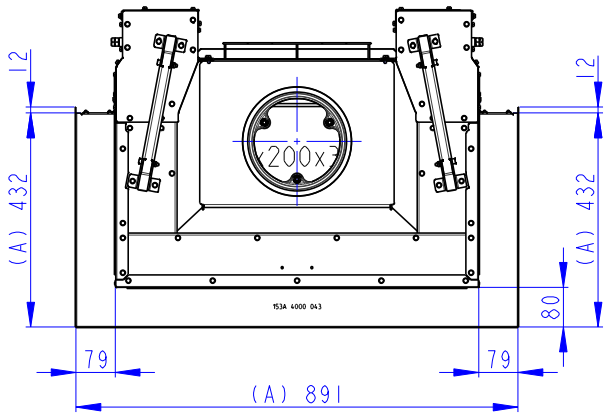

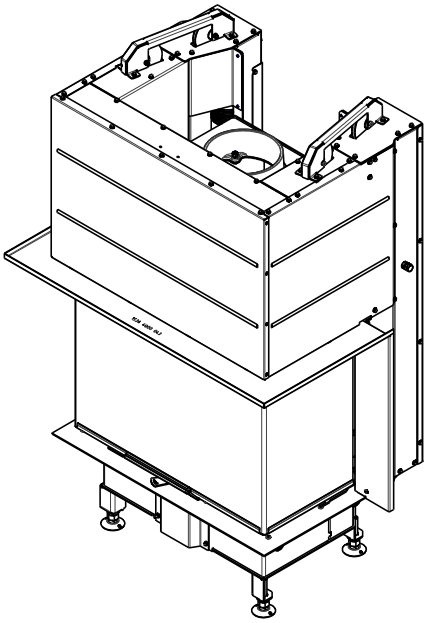

Romotop®

Heat C 3g L 65.52.31.01 (21, 24) + HC3LH RAM12

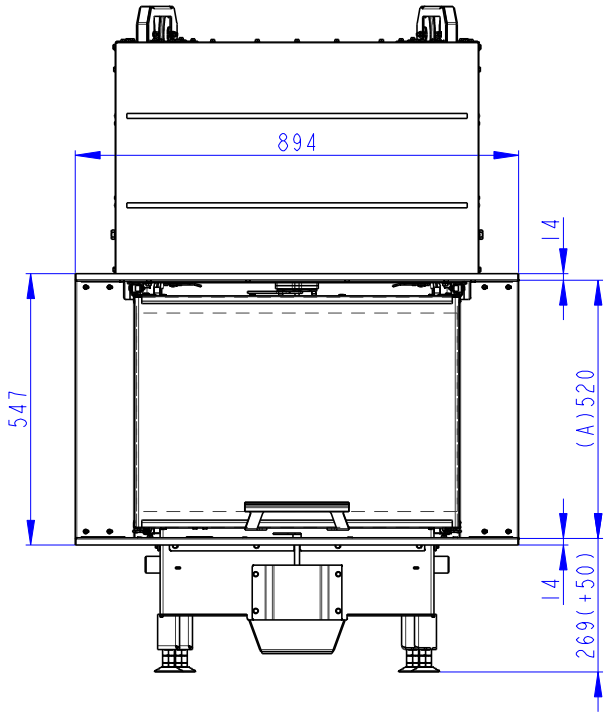

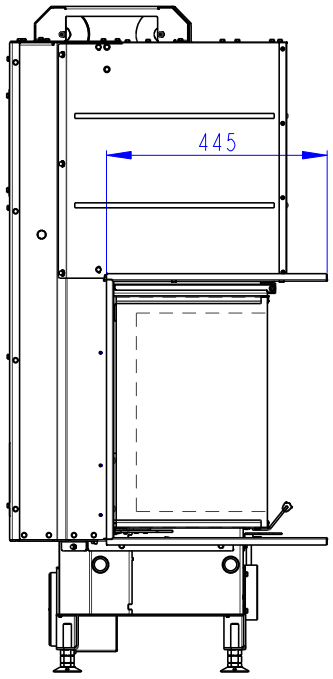

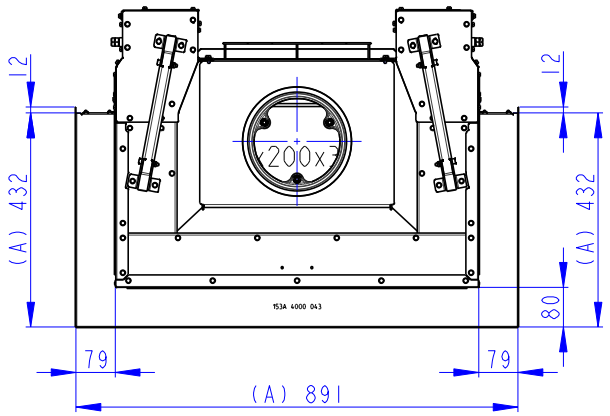

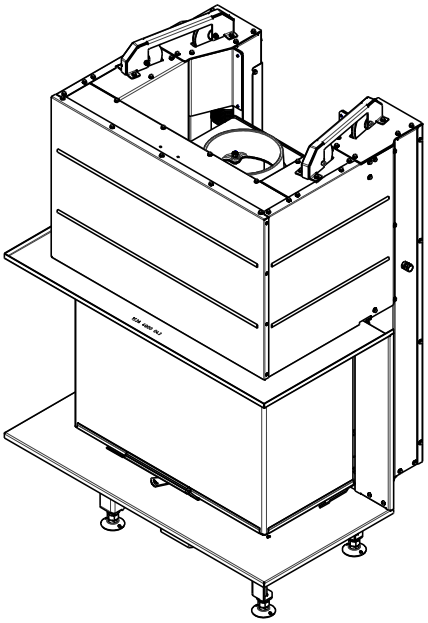

Romotop®

Heat C 3g L 65.52.31.01 (21, 24) + HC3LH RAM15

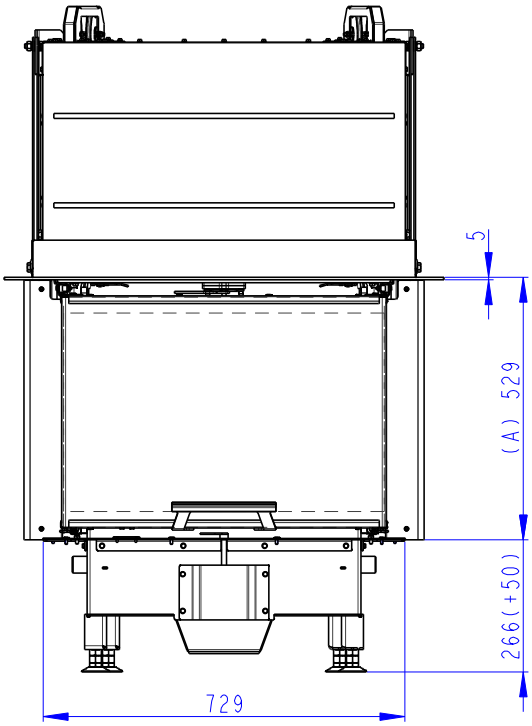

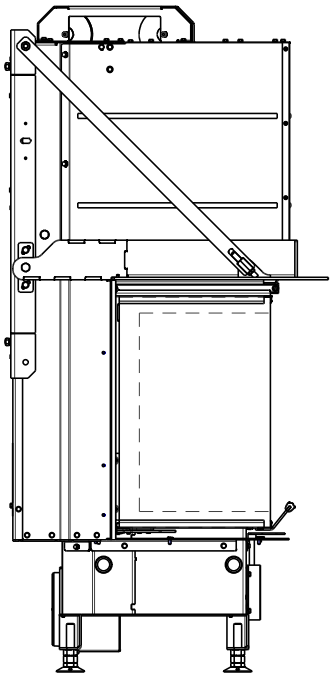

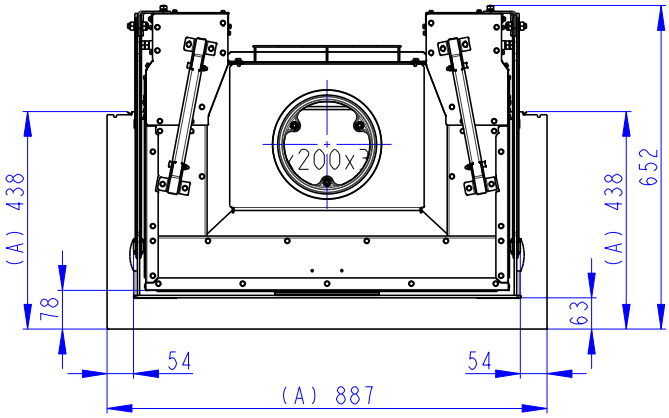

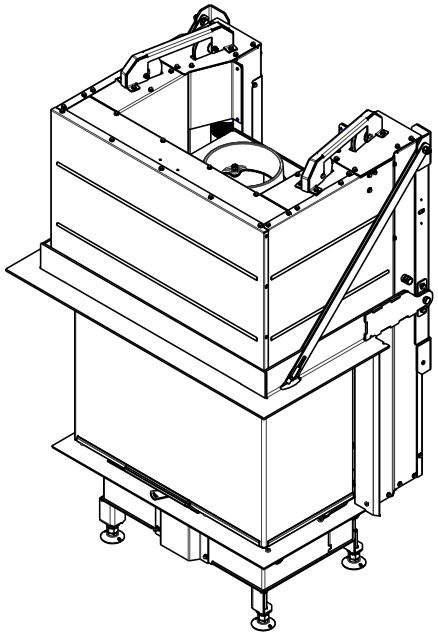

Romotop®

Heat C 3g L 65.52.31.01 (21, 24) + HC3LH RAM15 + HC3LH RAM11

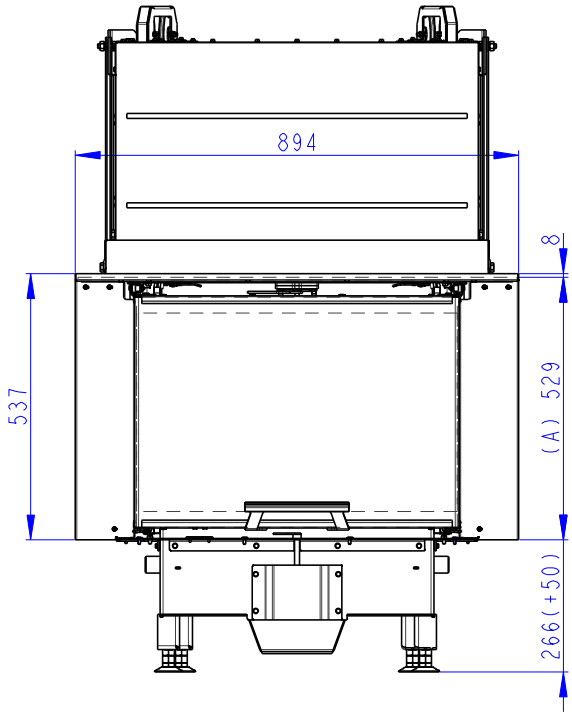

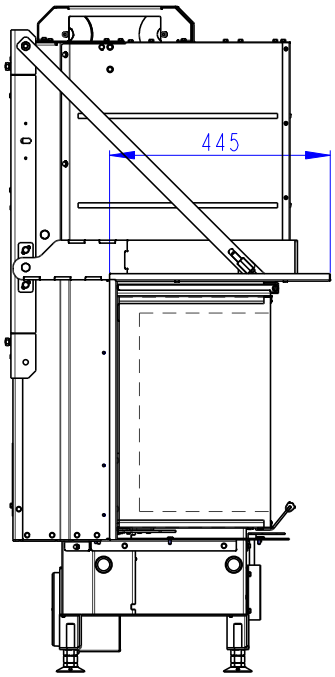

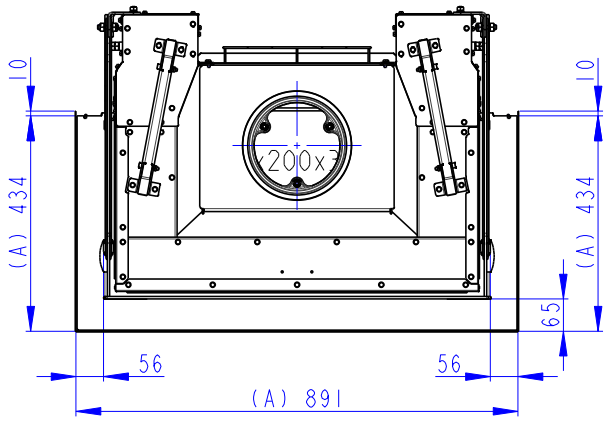

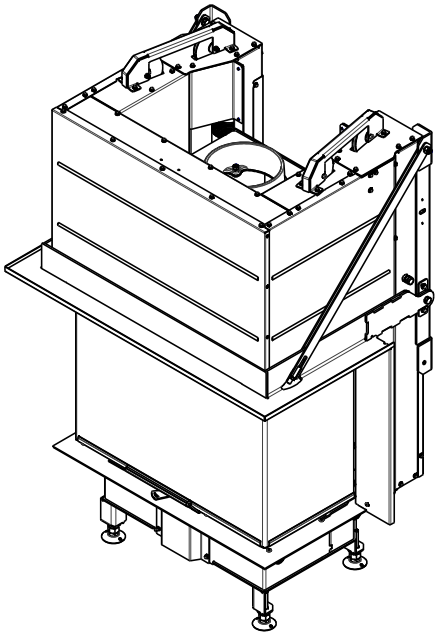

Romotop®

Heat C 3g L 65.52.31.01 (21, 24) + HC3LH RAM15 + HC3LH RAM12

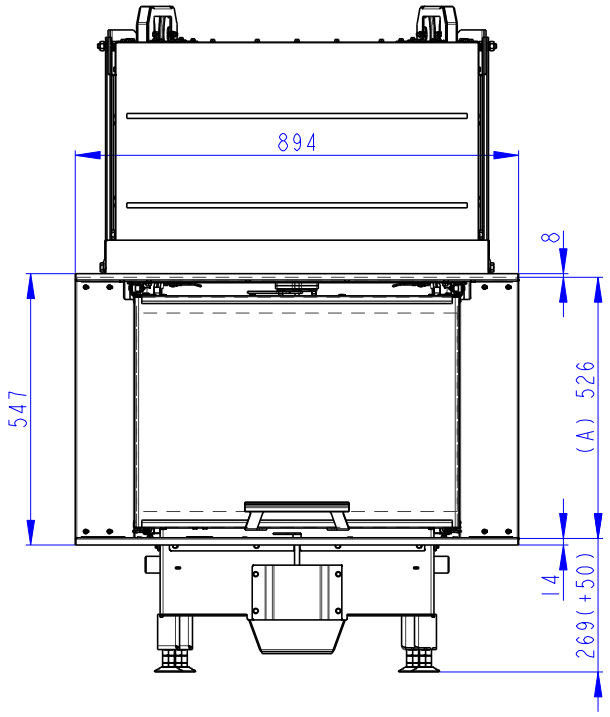

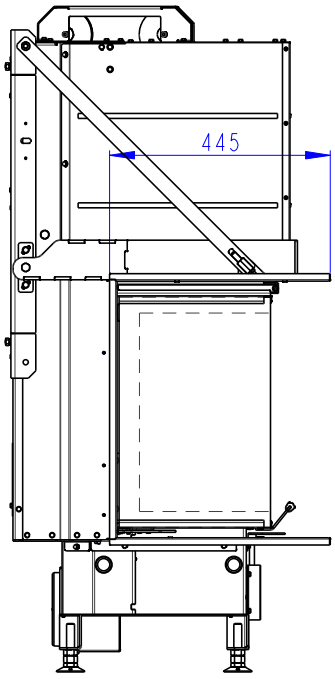

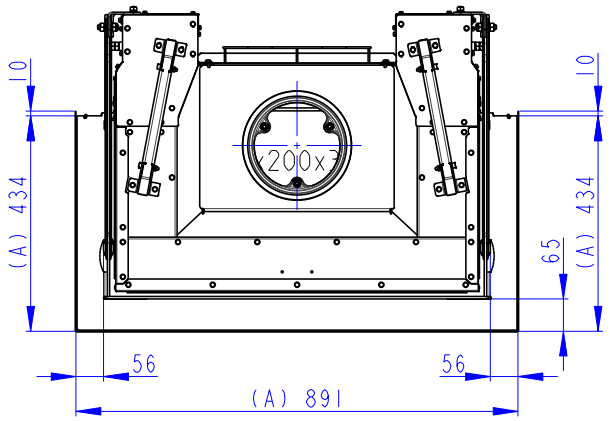

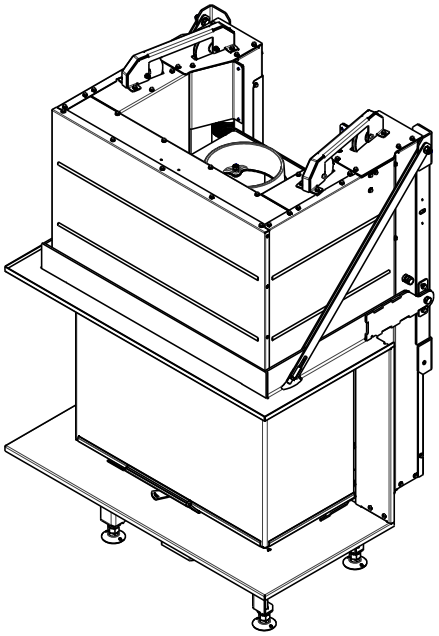

Romotop®

Heat C 3g L 65.52.31.01 (21, 24) + HC3LH RAM15 + HC3LH RAM13

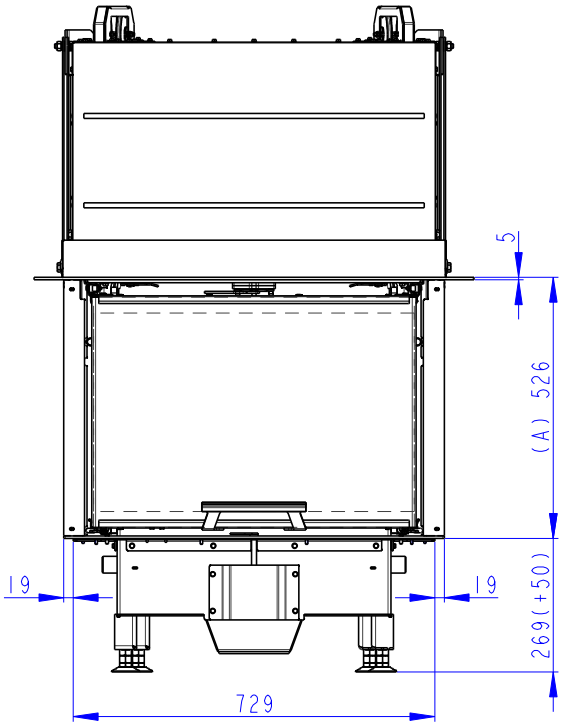

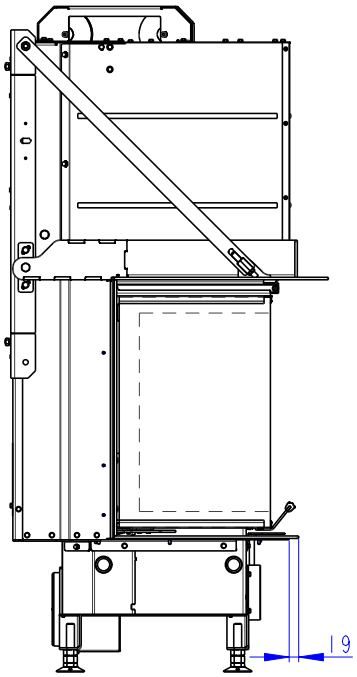

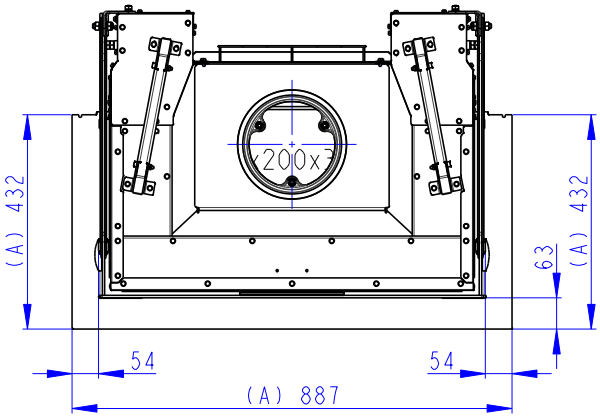

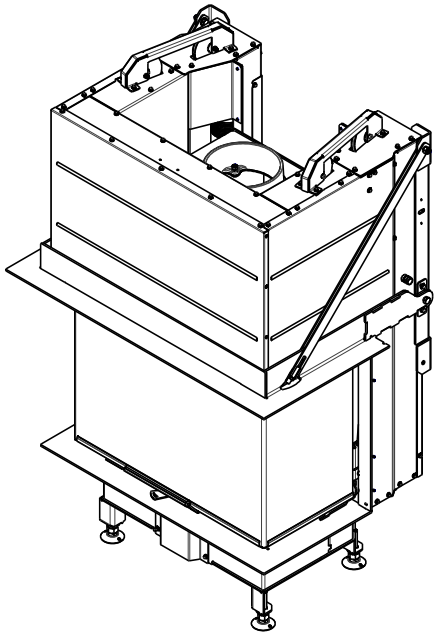

Romotop®

Heat C 3g L 65.52.31.01 (21, 24) + HC3LH RAM15 + HC3LH RAM14

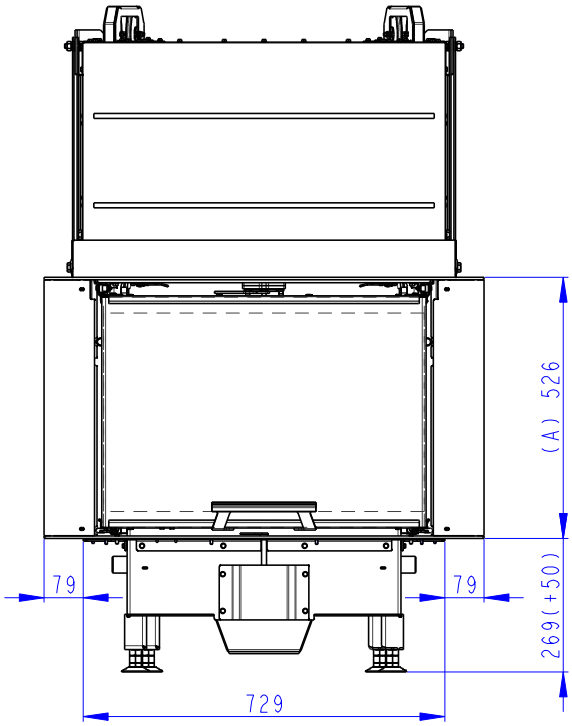

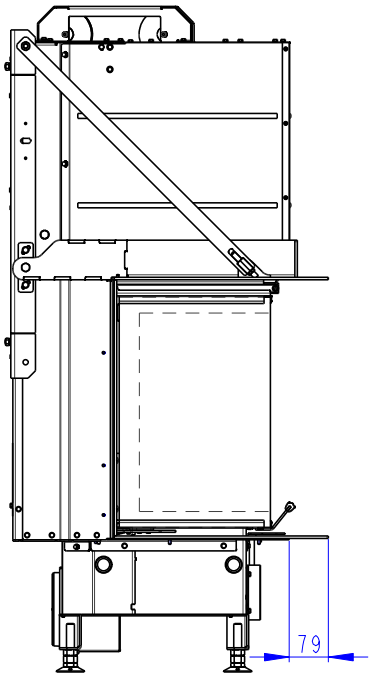

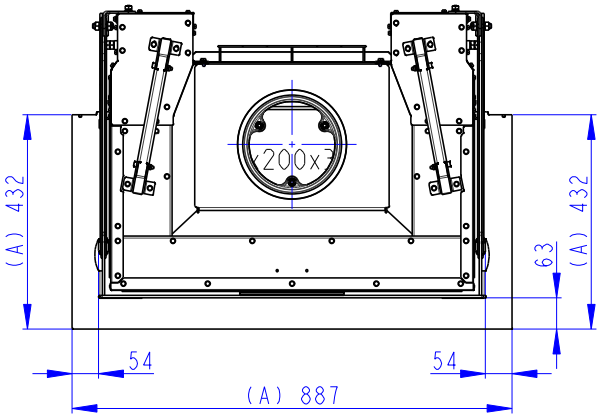

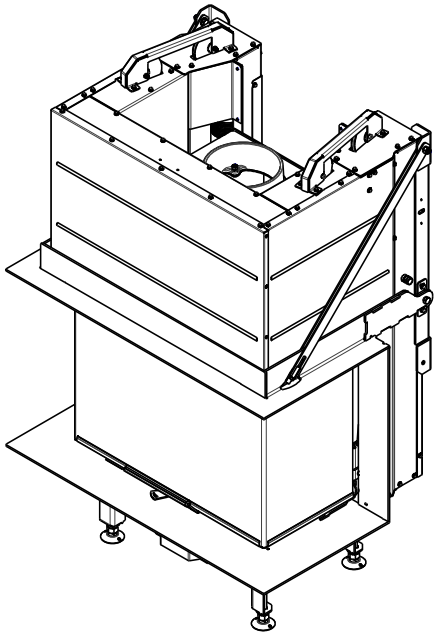

Heat C 3g L 65.52.31.01 (21, 24) K1

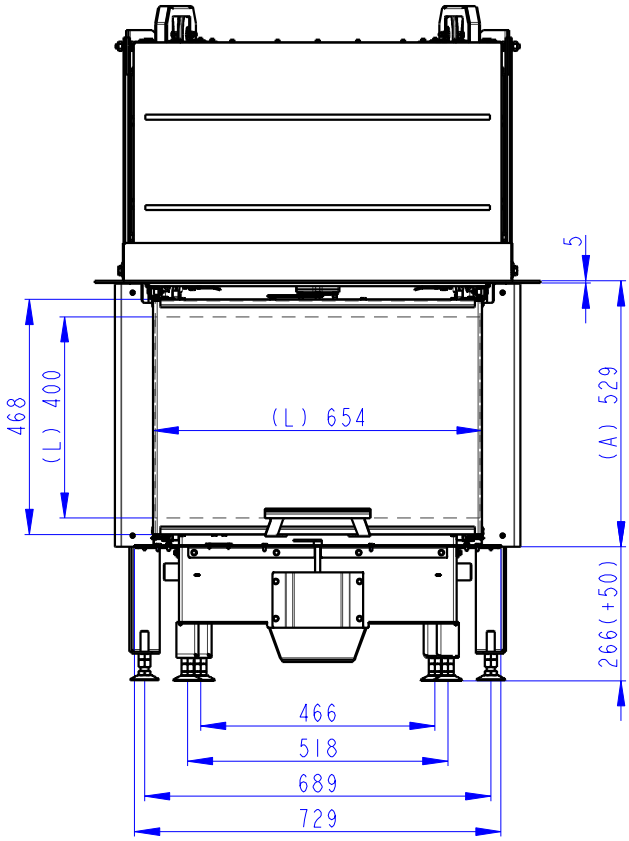

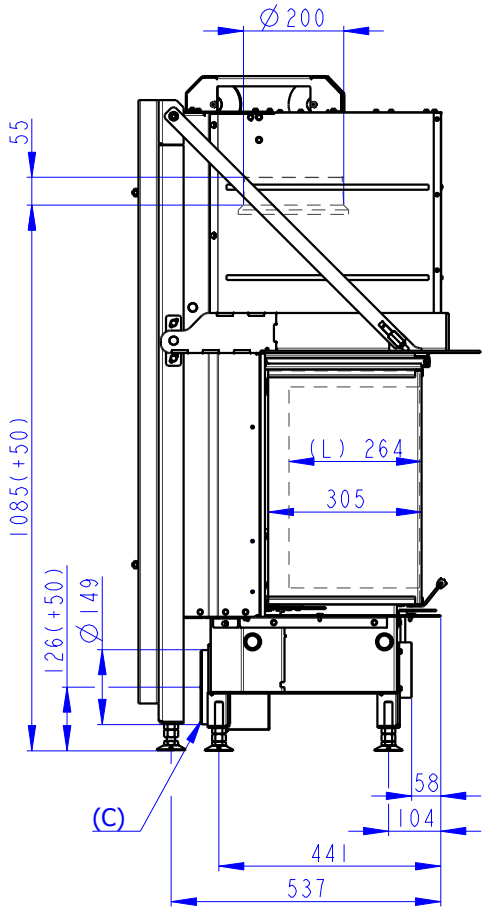

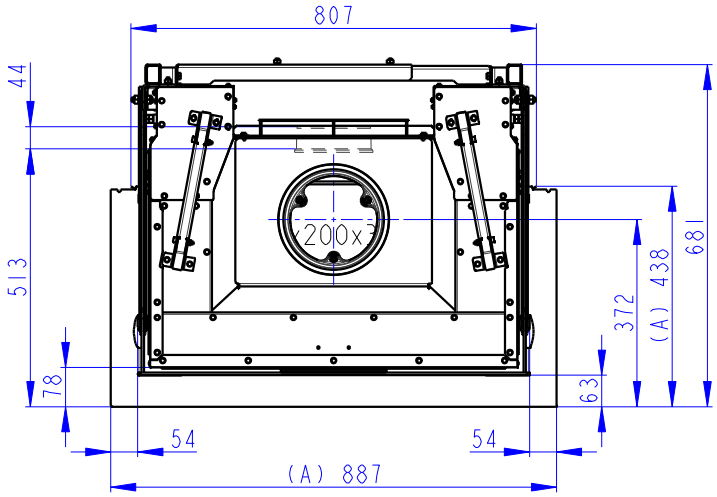

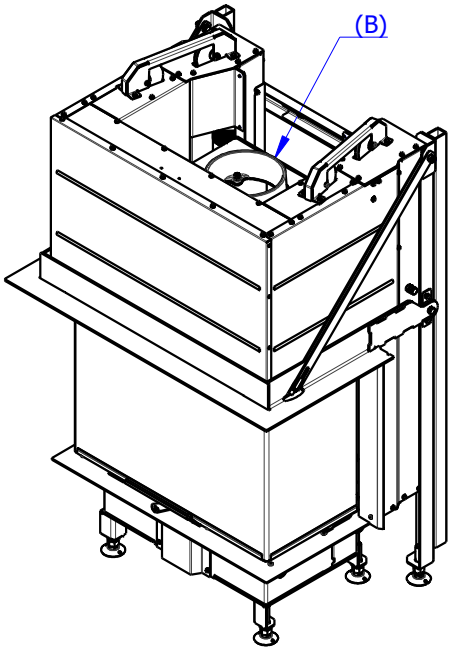

(A) Zastavbovy rozmer / In-built dimension / Baumaße
(B) Litinový odvod koure / Cast iron spigot / Der gusseiserne Rauchabgang
(C) Centralni privod vzduchu / Central air inlet / Zentralluftzufuhr
(D) Primarni a sekundarni vzduch / Primary and secondary air / Primärluft und Sekundärluft
(L) Volna plocha proskleni / Free glass area / Freie Glassichtfläche

Romotop®

Heat C 3g L 65.52.31.01 (21, 24) K1
+ H2 AIRBOX 02

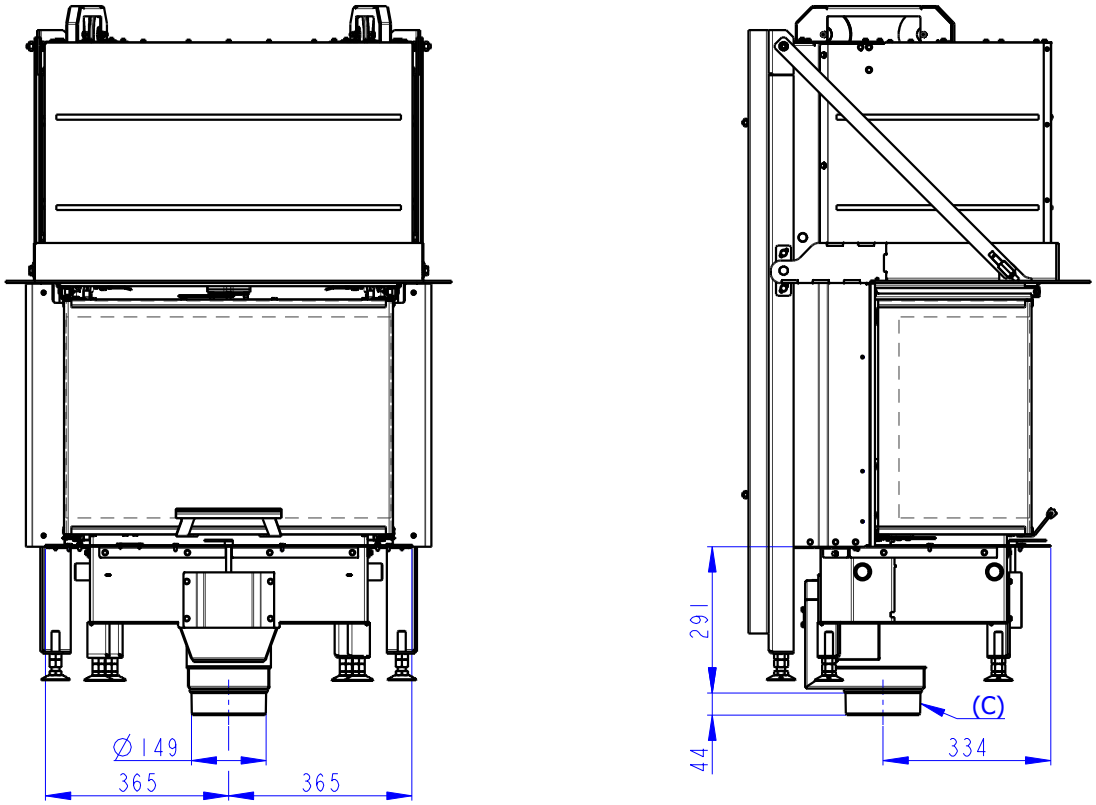

Romotop®

Heat C 3g L 65.52.31.01 (21, 24) K1 + HC2LH KON01

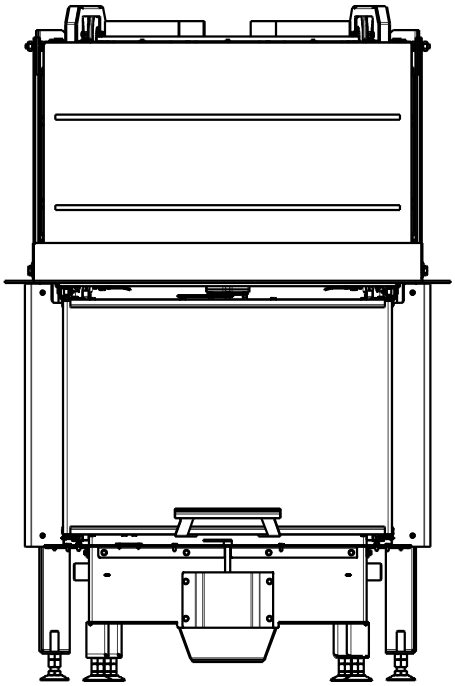

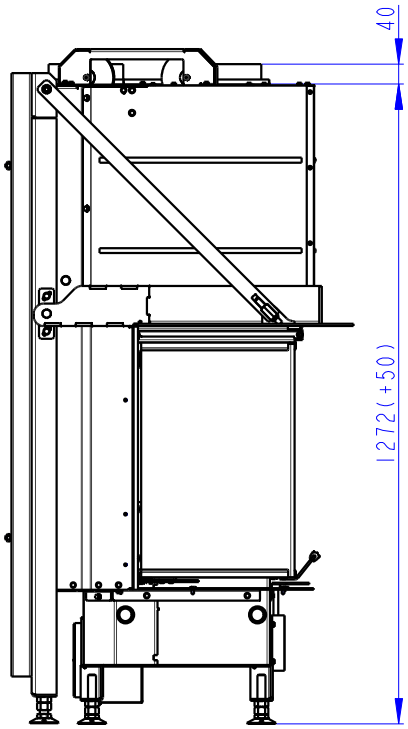

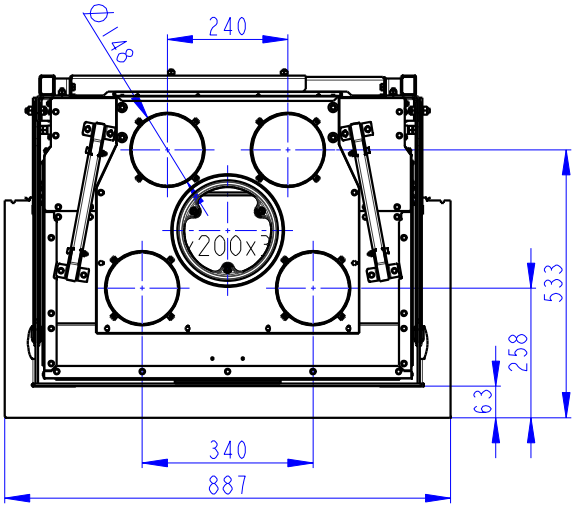

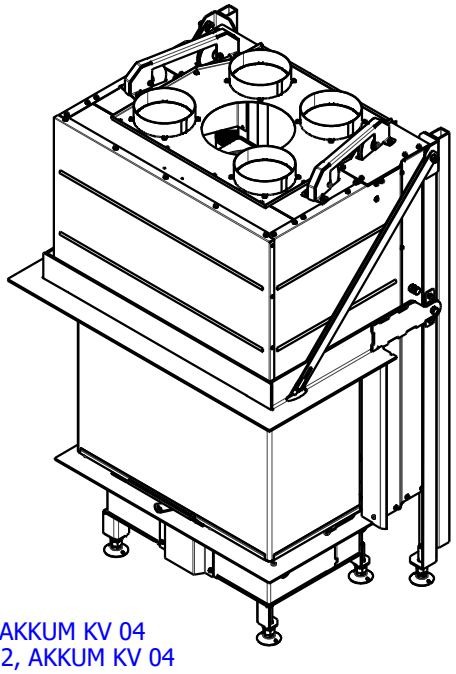

NELZE KOMBINOVAT SE SADAMI AKUMULACI AKKUM KV 02, AKKUM KV 04
UNABLE TO COMBINE WITH ACCUMULATION SETS AKKUM KV 02, AKKUM KV 04
NICHT KOMBINIERBAR MIT SPEICHERSATZ AKKUM KV 02, AKKUM KV 04

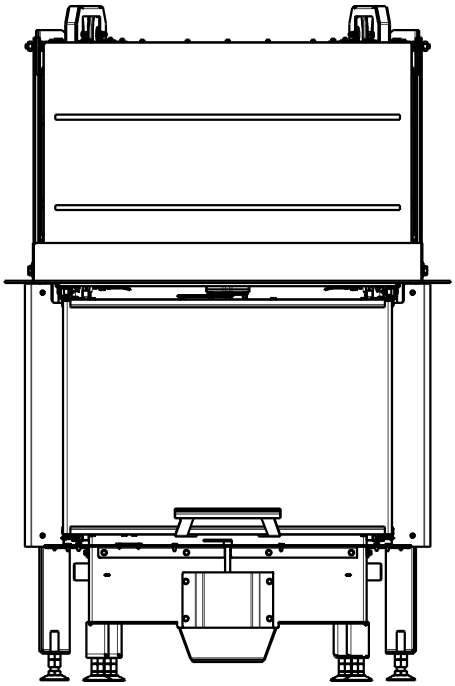

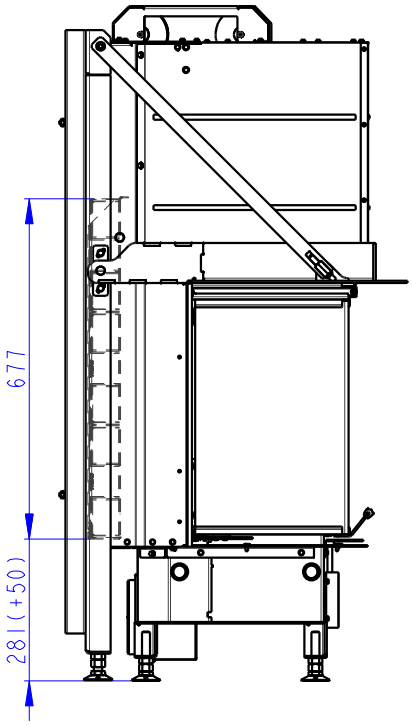
677
281(+50)

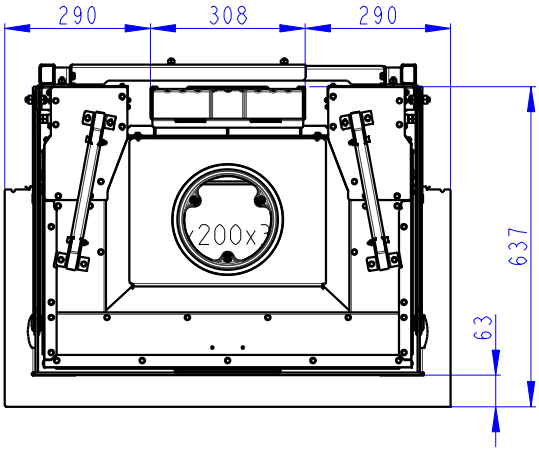
290
308
290
637
63

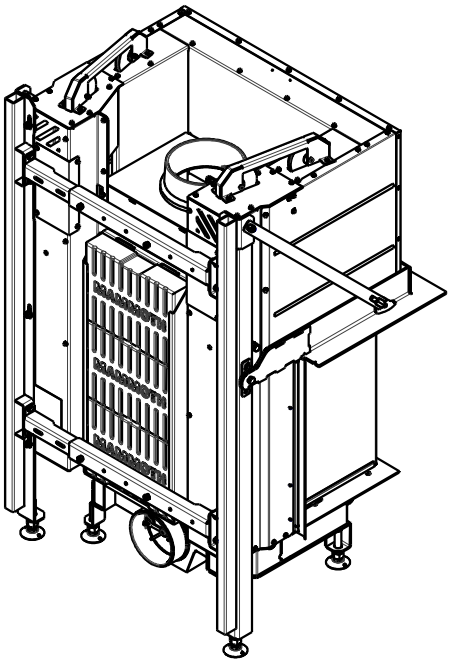

Romotop®

Heat C 3g L 65.52.31.01 (21, 24) K1 + AKKUM KV 04

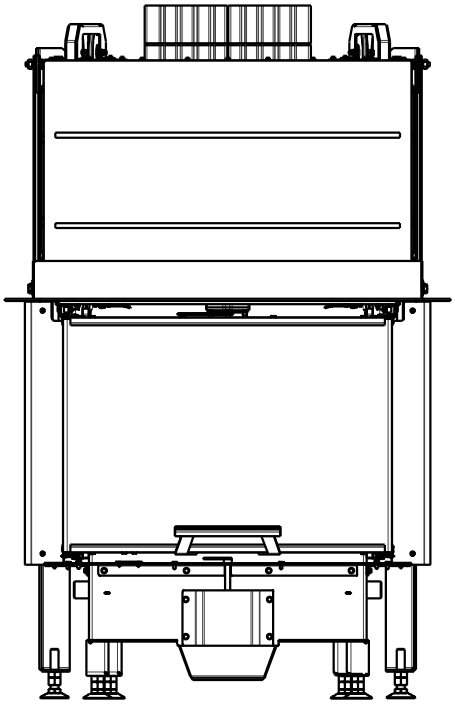

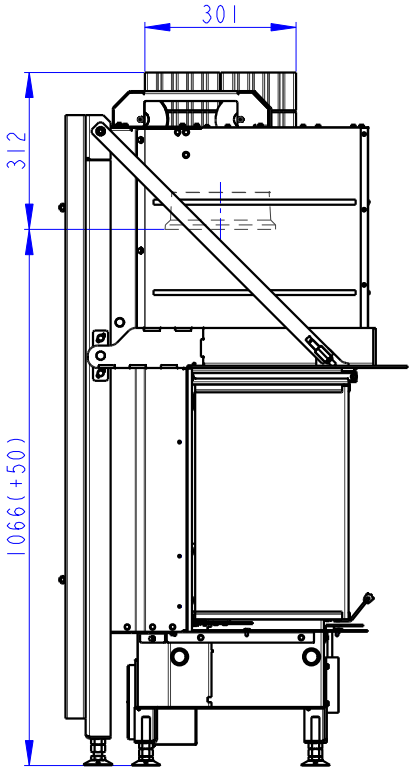

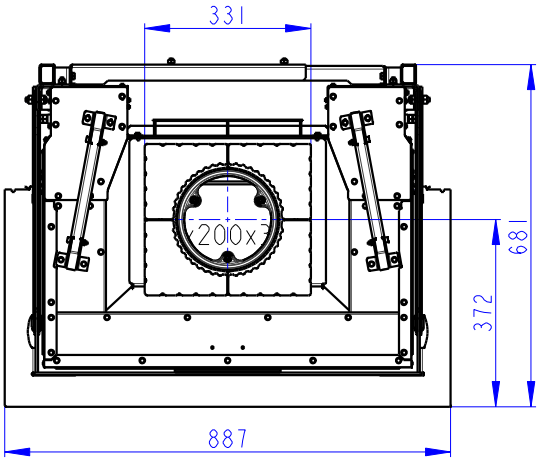

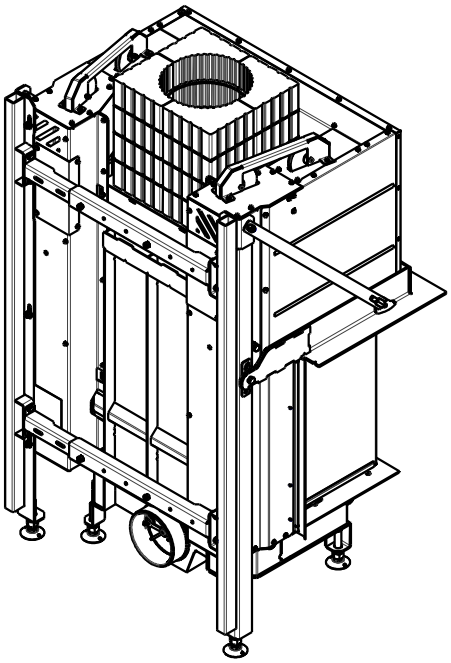

Romotop®

Heat C 3g L 65.52.31.01 (21, 24) K1 + HC3LH RAM11

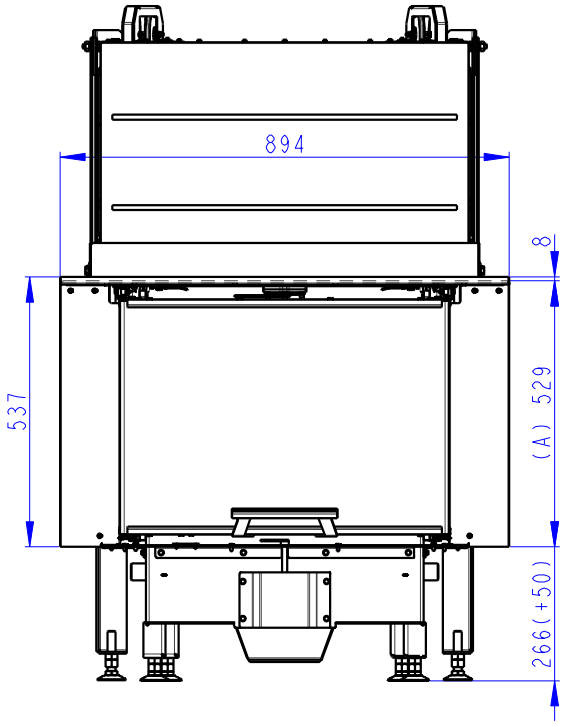

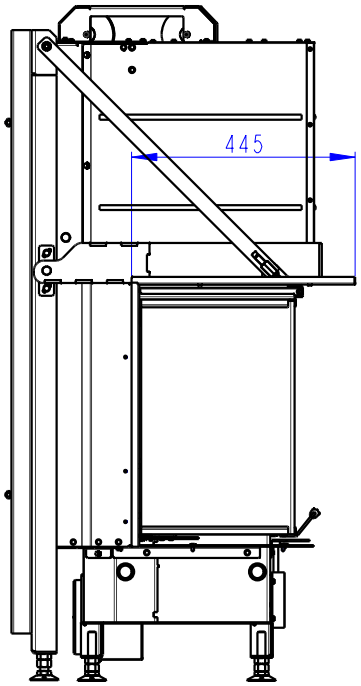

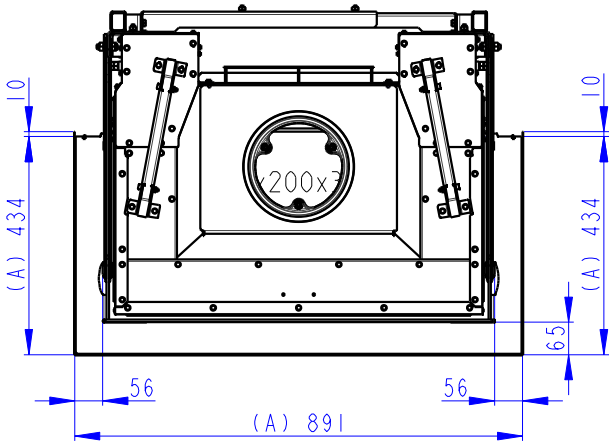

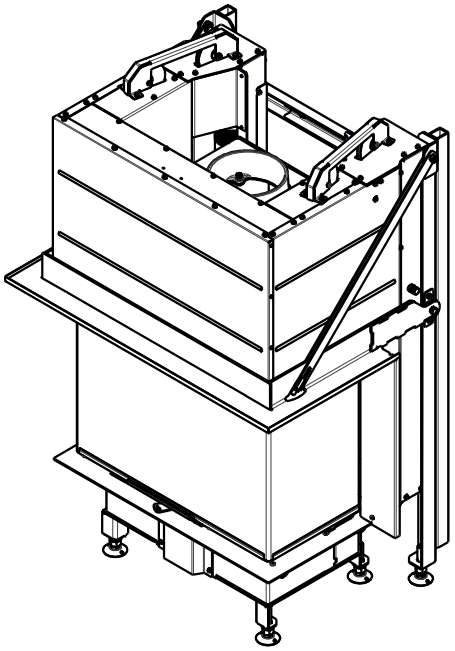

Romotop®

Heat C 3g L 65.52.31.01 (21, 24) K1 + HC3LH RAM12

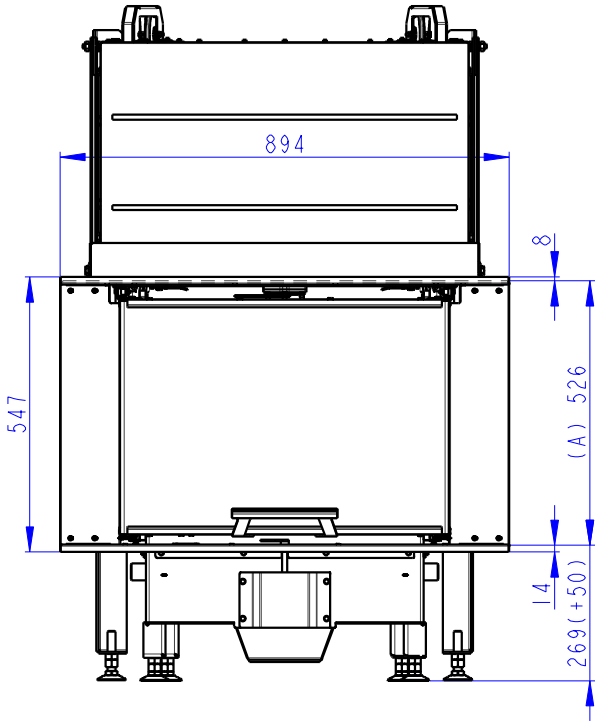

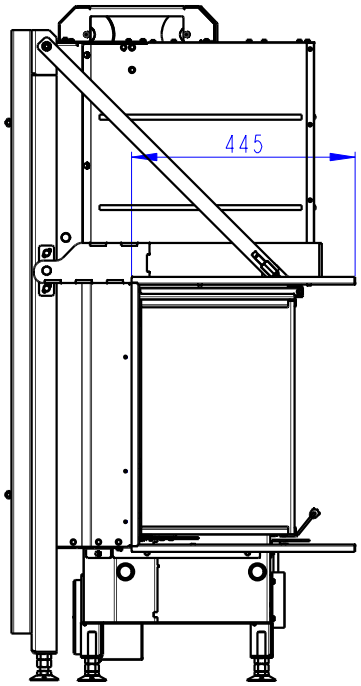

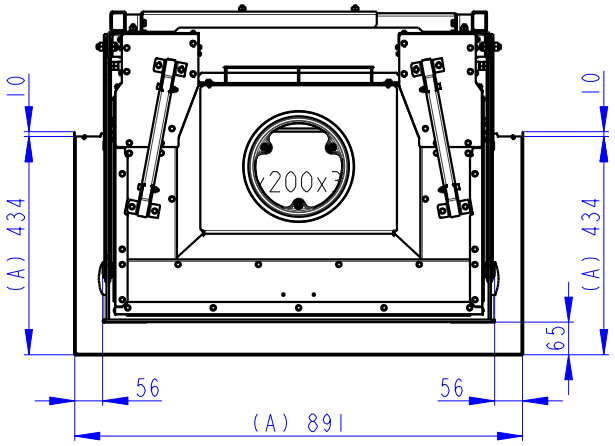

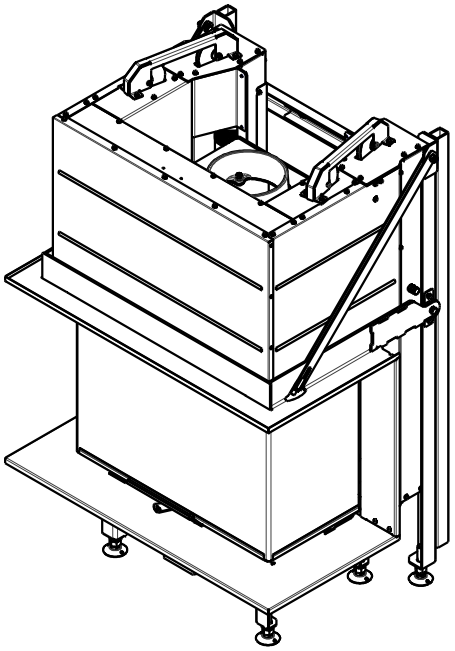

Romotop®

Heat C 3g L 65.52.31.01 (21, 24) K1 + HC3LH RAM13

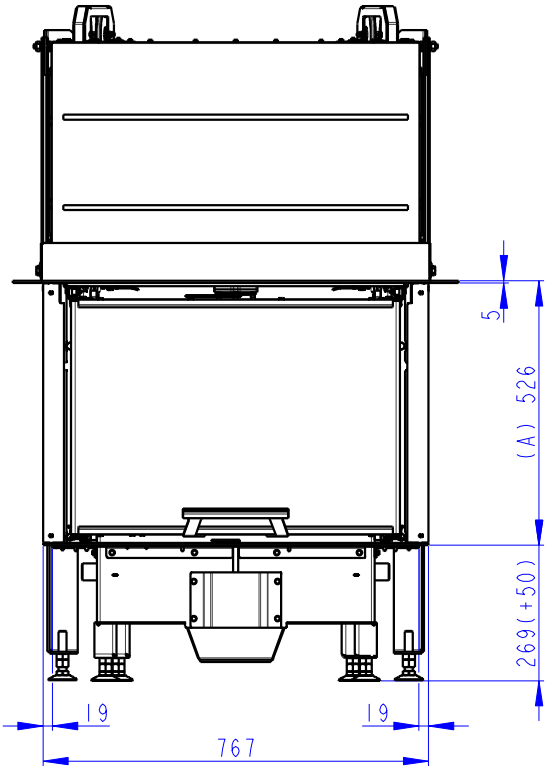

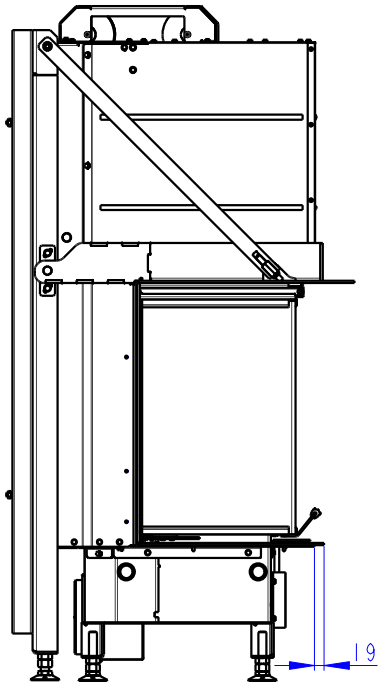

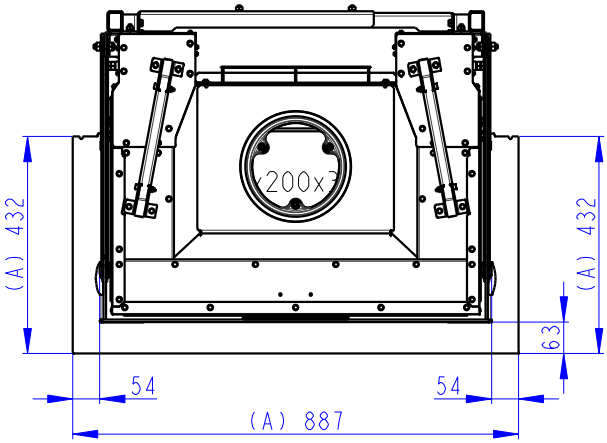

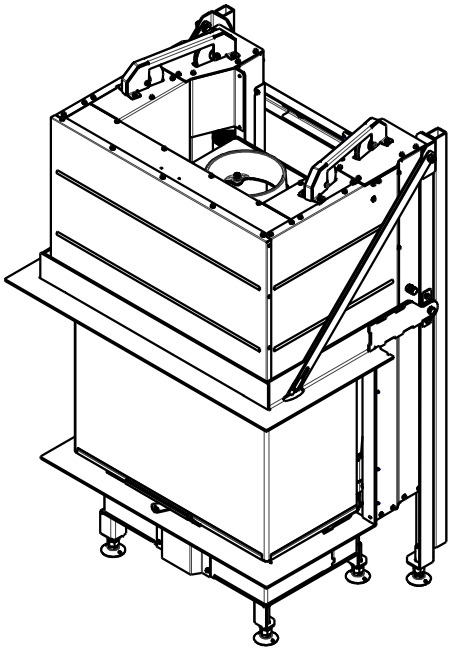

Romotop®
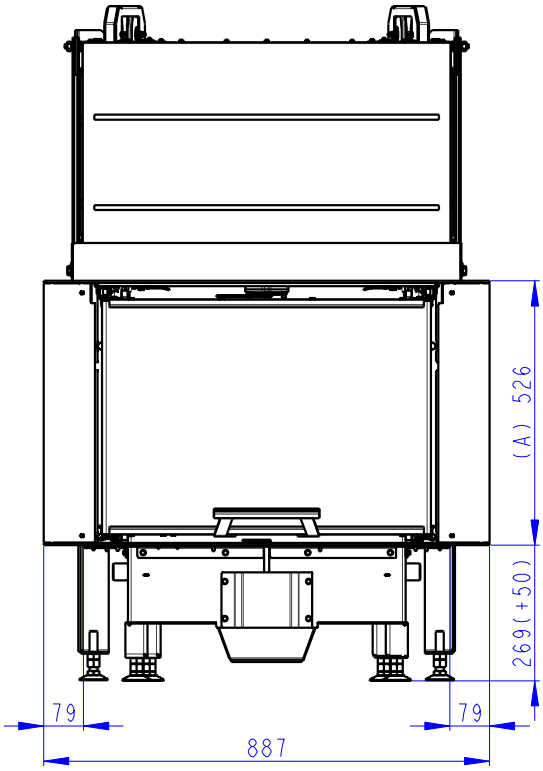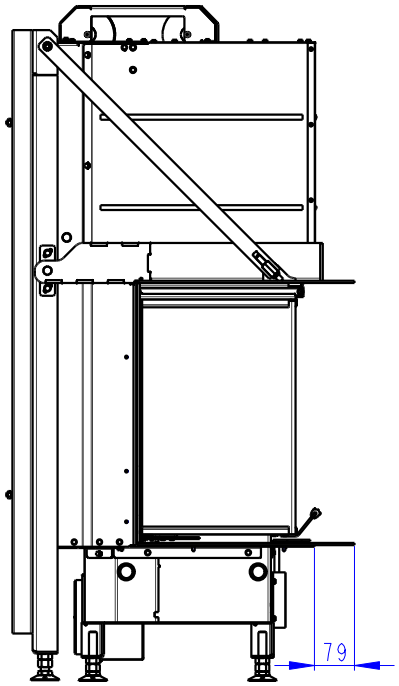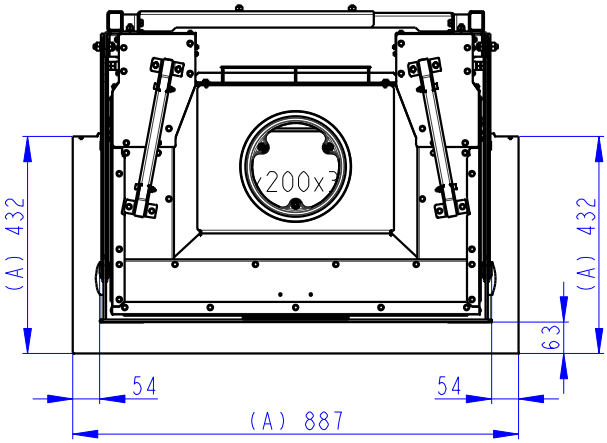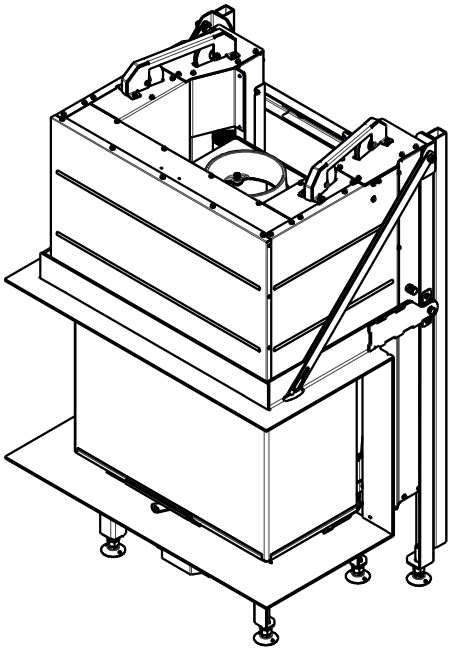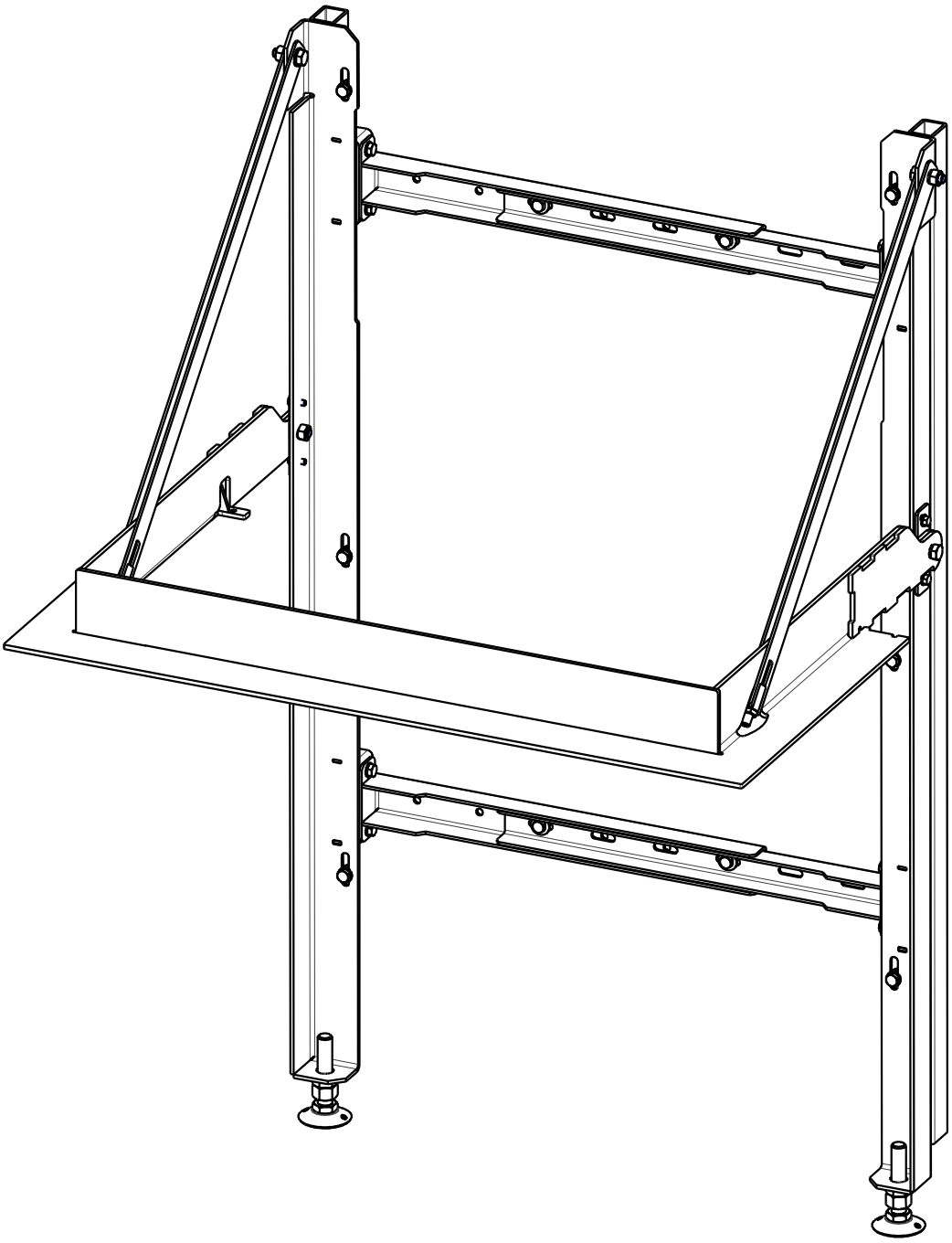
Heat C 3g L 65.52.31.01 (21, 24) K1 + HC3LH RAM14